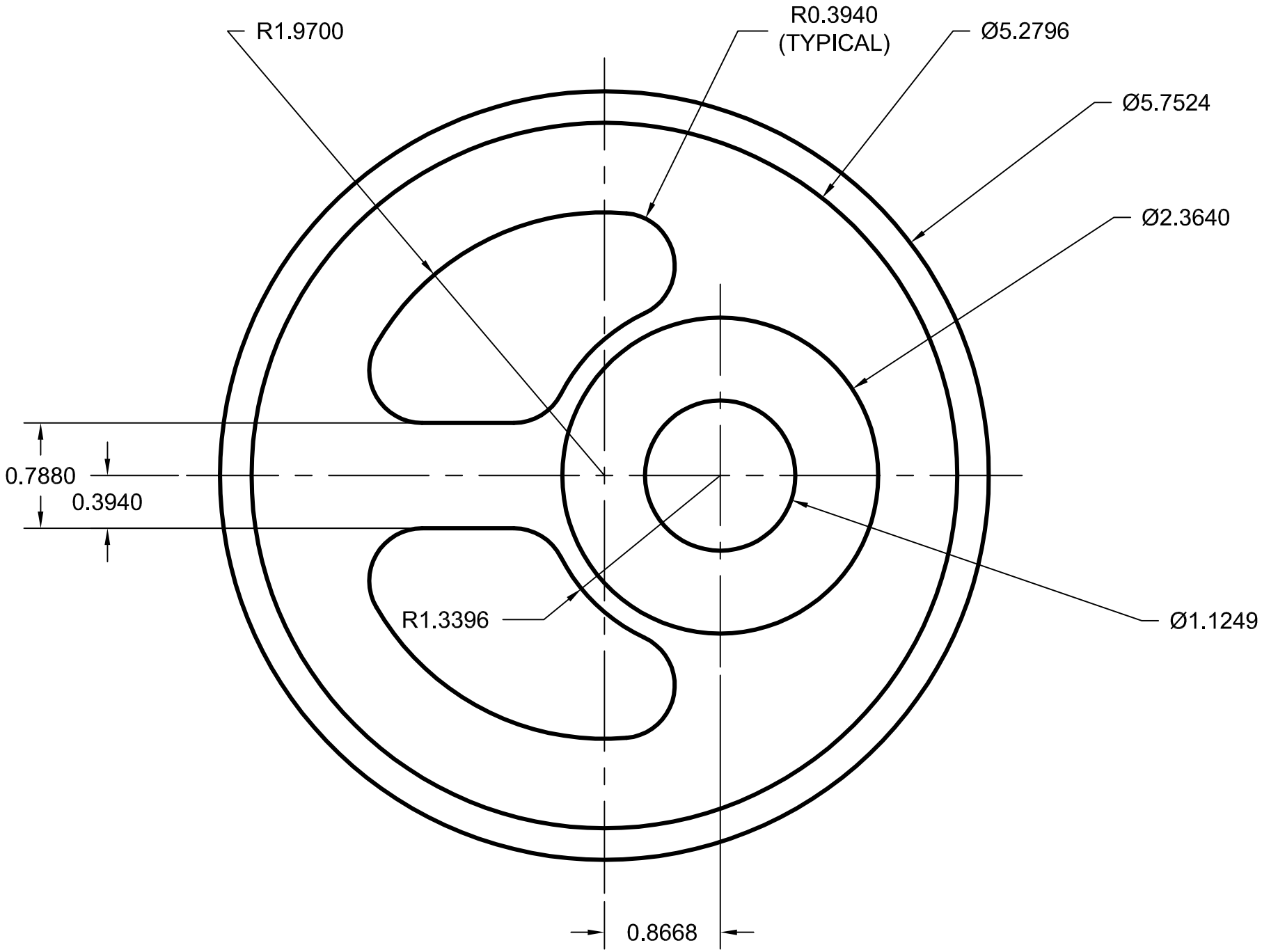

EDD10171.DWG

ASSIGNMENT #9	(STUDENT'S NAME)	1=1	(DATE)		9-8