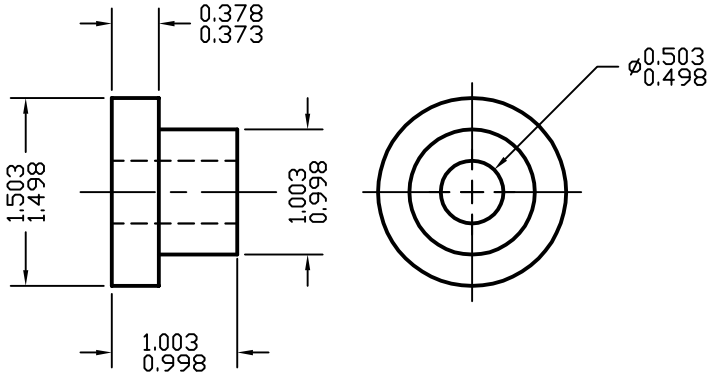

FIGURE 2

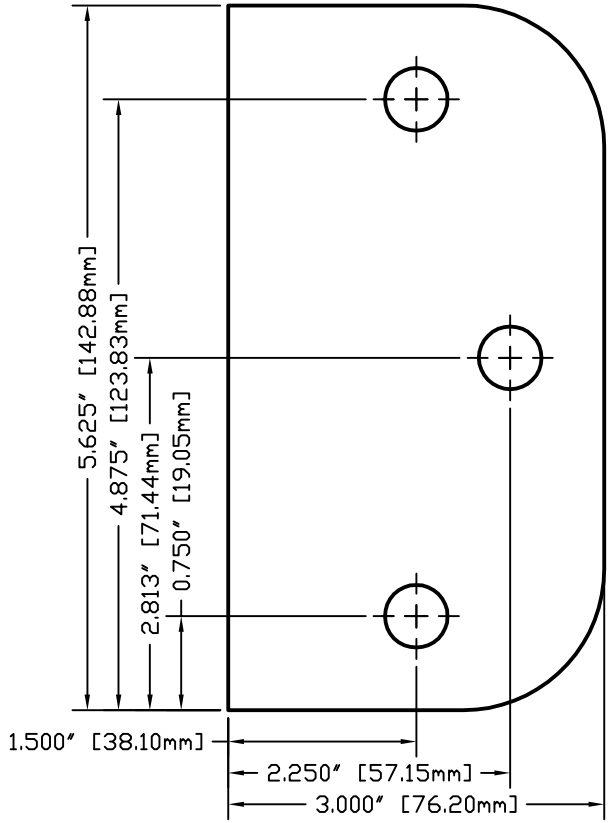

FIGURE 1

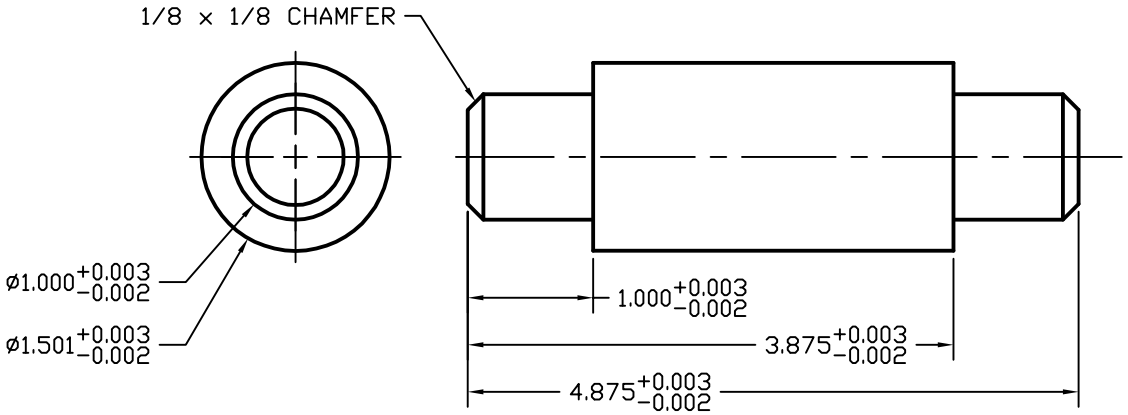

FIGURE 3

EDD121A4.DWG

CCAC SOUTH CAMPUS WEST MIFFLIN, PA.		
DIMENSIONING		
DR BY:		11A
(DATE) DATE:	1=1 SCALE:	