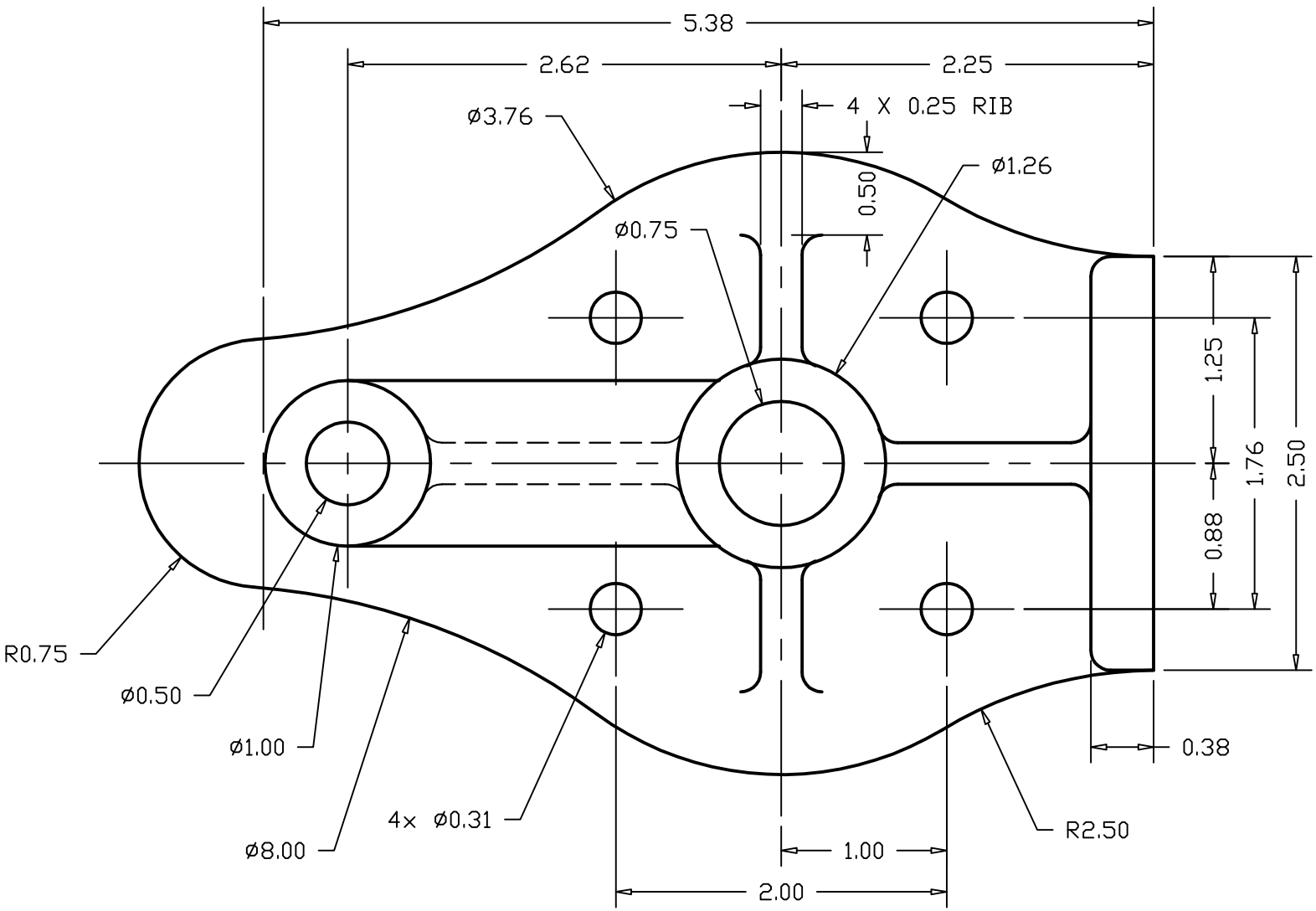

ALL FILLETS AND ROUNDS R.12

PRESS BASE	(STUDENT'S NAME)	1=1	(DATE)		4-B